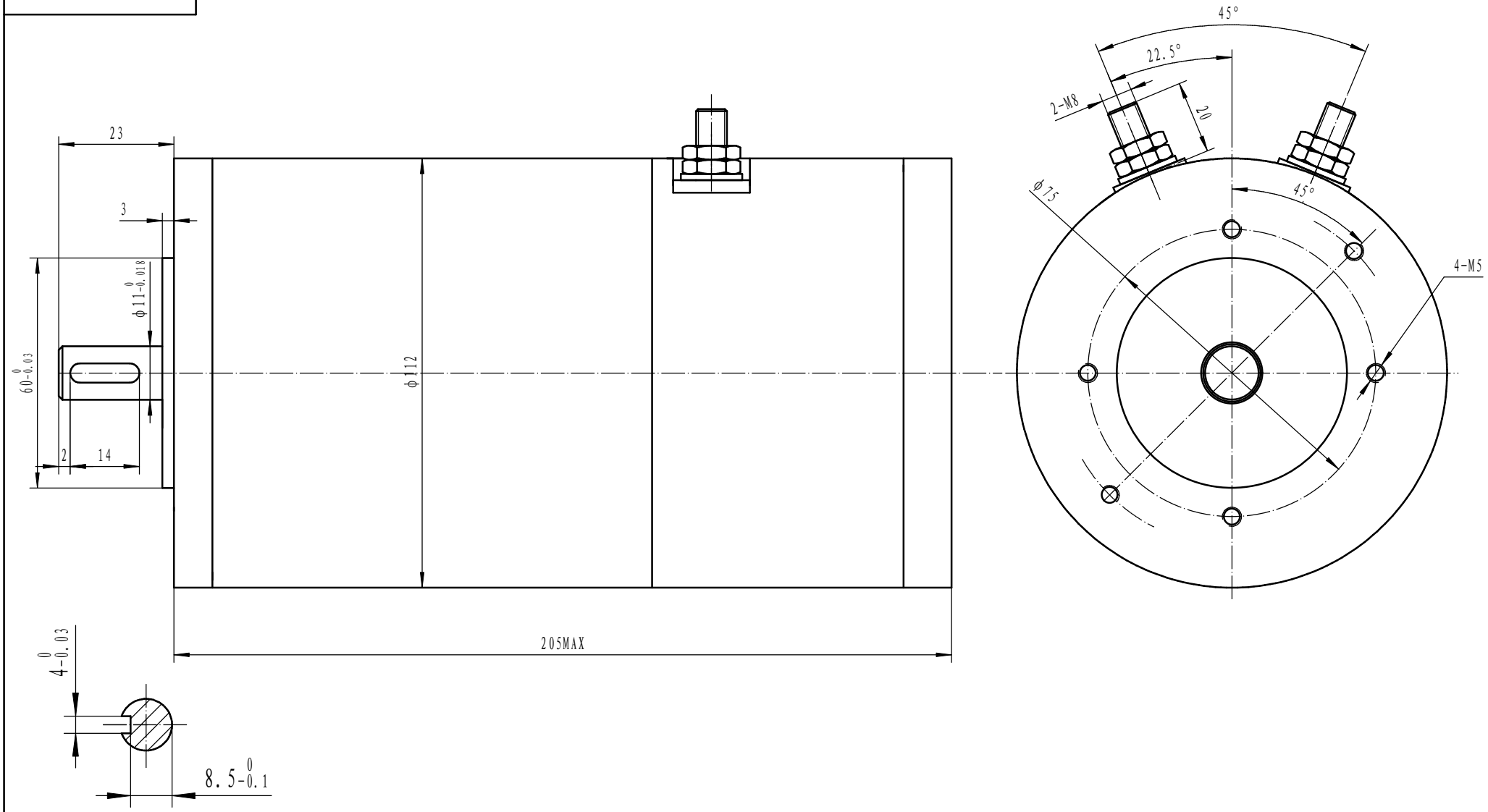

Model	Power(W)	Duty	Voltage(V)	Speed(rpm)	
EC350.120	350/500	S1/S2 30′	12	3000	
EC350.240	350/500	S1/S2 30′	24	3000	

110ZYT-63B14 (4)

PMDC MOTOR

1:1